Z:\FOXFAB_DATA\ENGINEERING\2 JOBS\J15302 Garner Road -PO#23

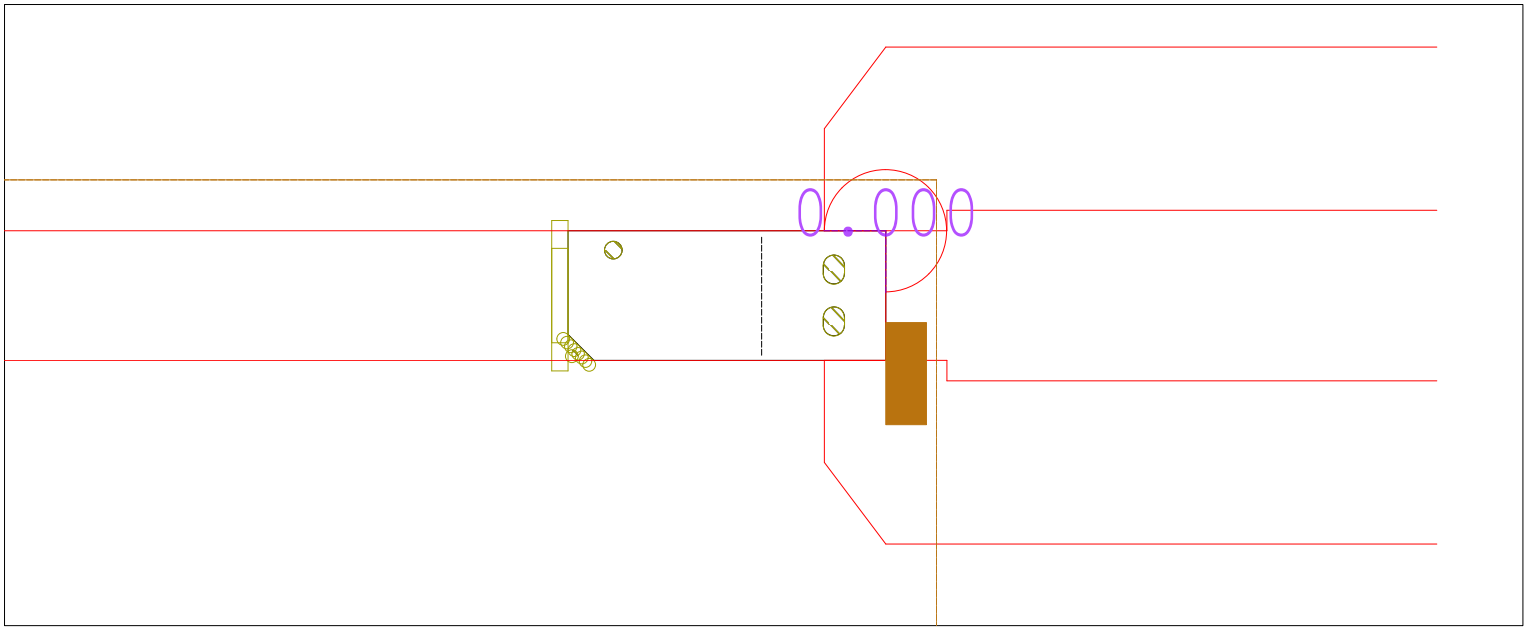


```
 === PART ==================================================================
|NC File Name: Z:\FOXFAB_DATA\ENGINEERING\2 JOBS\J15302 GARNER ROAD  -PO#2365-895801\200 MECH\
|Draft Num: 90004         |Date: JUL 28 2025       |Version:             |
|Order Num:        |Description:                                  |
 === SHEET ==============Number of Sheets: 1 ==================
|Material: Copper                  |Sheet Size: 144 X 2.5       |T= 0.250   |
|Num of Parts: 1              |Part Size: 6.127 X 2.500                 |
|Part Weight: 0.163 kg               |Sheet Weight: 3.98 kg              |
 === MACHINE ===============================================================
|Model: BO_COPPERBAR BO_CU-10STATIONS                          |Clearance: 0.0362  0.0425  0.048
|Rotate/Turn Sheet: No            |Clamps: 0                       |
|Num of Repositions: 0        |                                    |
 === PROGRAM ===============================================================
|Number: 90004    |Length: 589      |Programmer:              |
|Notes: VERTICAL OBLONG                                                                        |
 === JOB TIME ==============================================================
|Travel: 00:01  |Tool Change: 01:20    |Punch: 00:15 |Tot: 01:35     |
 === USED TOOLS LIST (A total of      4 tools) ==========================
| ST No.   | Type       | Length    | Width      | Angle   | Hits           |
 ---------------------------------------------------------------------------
| 5      | RO            | 0.3441   |      |   | 1       |
| 1      | RO            | 0.2500   |      |   | 9       |
| 4 AI     | OB            | 0.5598   | 0.4161     | 0  | 2       |
| 9      | RE            | 0.3150   | 2.3618     | 0  | 2       |
|                                                          |TOTAL: 14 |
```

Z:\FOXFAB_DATA\ENGINEERING\2 JOBS\J15302 Garner Road -PO#23

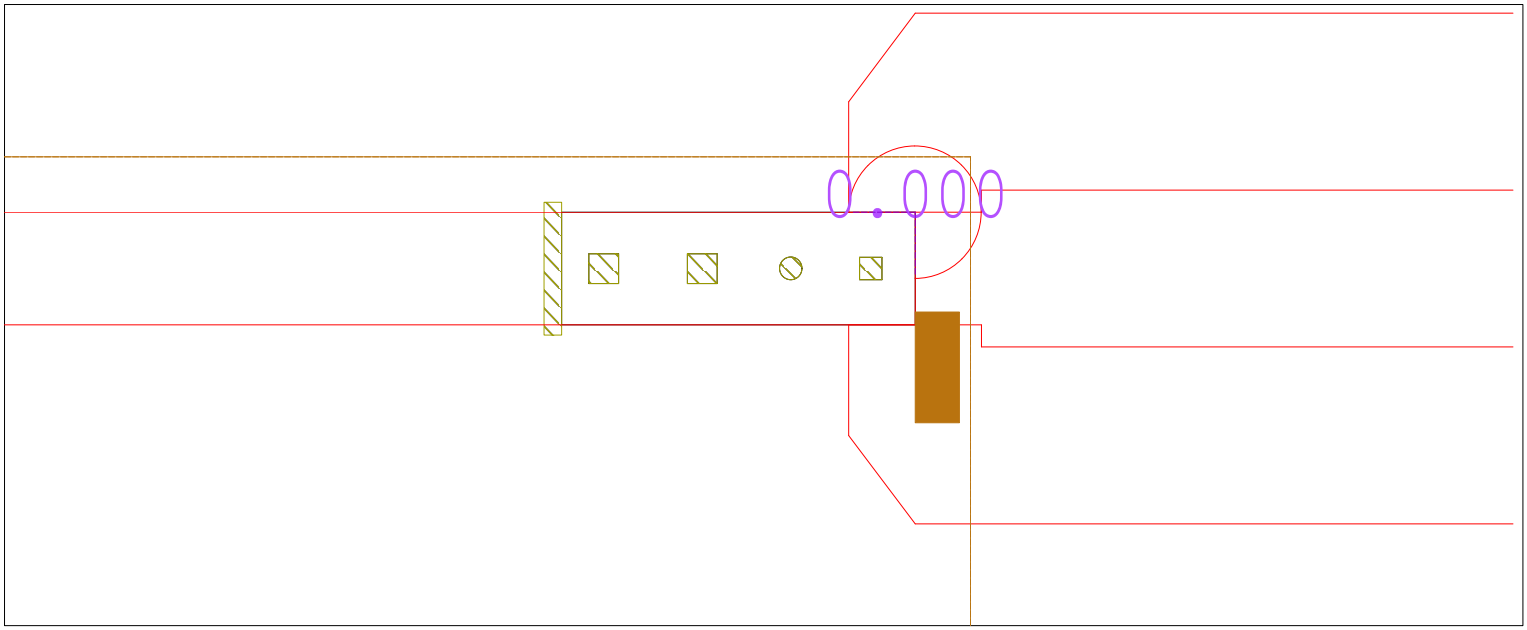

```
 === PART ==================================================================
|NC File Name: Z:\FOXFAB_DATA\ENGINEERING\2 JOBS\J15302 GARNER ROAD  -PO#2365-895801\200 MECH\
|Draft Num: 90005         |Date: JUL 28 2025       |Version:             |
|Order Num:        |Description:                                  |
 === SHEET ==============Number of Sheets: 1 ==================
|Material: Copper                   |Sheet Size: 144 X 2       |T= 0.250   |
|Num of Parts: 1               |Part Size: 6.289 X 2.000                 |
|Part Weight: 0.130 kg                |Sheet Weight: 3.19 kg              |
 === MACHINE ===============================================================
|Model: BO_COPPERBAR BO_CU-10STATIONS                        |Clearance: 0.0362  0.0425  0.048
|Rotate/Turn Sheet: No             |Clamps: 0                      |
|Num of Repositions: 0        |                                    |
 === PROGRAM ===============================================================
|Number: 90005    |Length: 513      |Programmer:              |
|Notes:                                                                |
 === JOB TIME ==============================================================
|Travel: 00:00  |Tool Change: 01:20    |Punch: 00:06 |Tot: 01:27     |
 === USED TOOLS LIST (A total of      4 tools) ==========================
| ST No.   | Type       | Length    | Width      | Angle   | Hits           |
 ---------------------------------------------------------------------------
| 5      | SQ            | 0.5299   |      | 0  | 2       |
| 4      | SQ            | 0.4000   |      | 0  | 1       |
| 2      | RO            | 0.4059   |      |   | 1       |
| 9      | RE            | 0.3150   | 2.3618     | 0  | 1       |
|                                                          |TOTAL: 5 |
```

Z:\FOXFAB_DATA\ENGINEERING\2 JOBS\J15302 Garner Road -PO#23

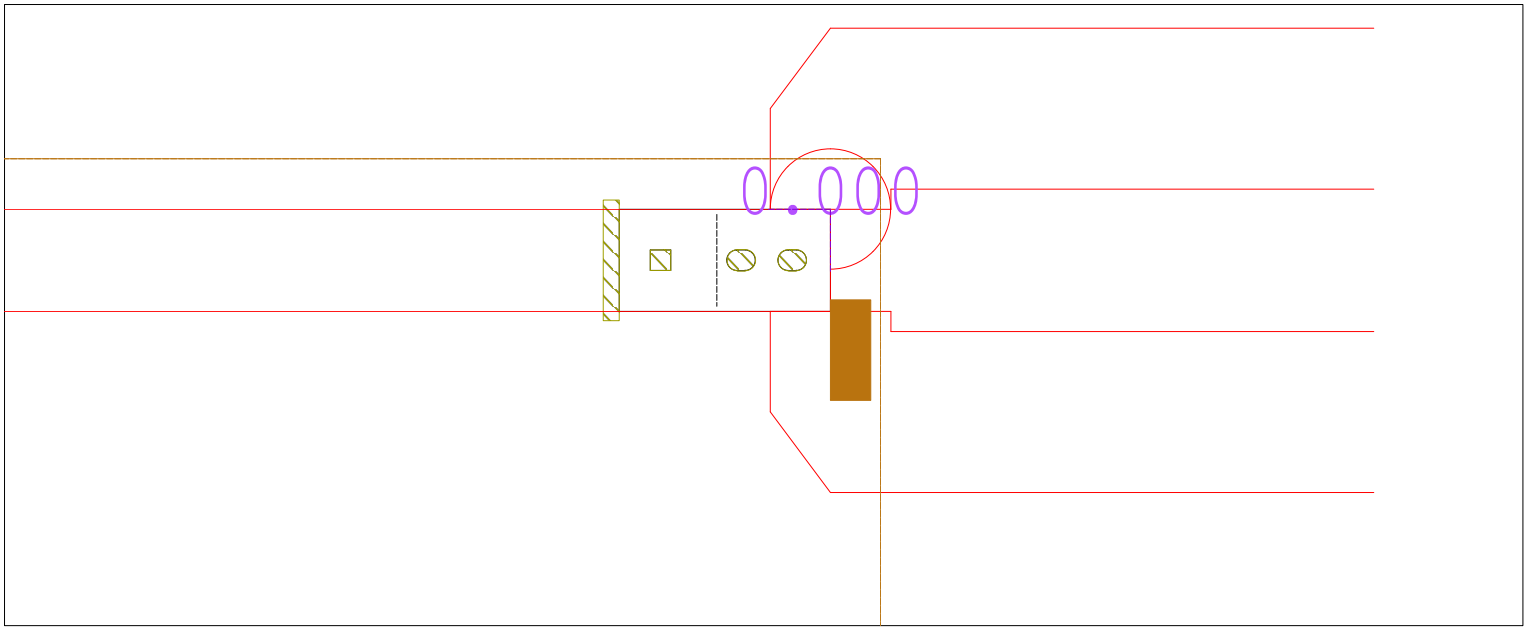


```
 === PART ==================================================================
|NC File Name: Z:\FOXFAB_DATA\ENGINEERING\2 JOBS\J15302 GARNER ROAD  -PO#2365-895801\200 MECH\
|Draft Num: 90006         |Date: JUL 28 2025       |Version:             |
|Order Num:        |Description:                                  |
 === SHEET ==============Number of Sheets: 1 ==================
|Material: Copper                   |Sheet Size: 144 X 2       |T= 0.250   |
|Num of Parts: 1               |Part Size: 4.132 X 2.000                 |
|Part Weight: 0.085 kg                |Sheet Weight: 3.19 kg              |
 === MACHINE ===============================================================
|Model: BO_COPPERBAR BO_CU-10STATIONS                          |Clearance: 0.0362  0.0425  0.048
|Rotate/Turn Sheet: No             |Clamps: 0                       |
|Num of Repositions: 0        |                                     |
 === PROGRAM ===============================================================
|Number: 90006    |Length: 473      |Programmer:              |
|Notes: HORIZONTAL OBLONG                                                                    |
 === JOB TIME ==============================================================
|Travel: 00:00  |Tool Change: 01:00    |Punch: 00:05 |Tot: 01:05     |
 === USED TOOLS LIST (A total of      3 tools) ==========================
| ST No.   | Type       | Length    | Width      | Angle   | Hits           |
 ---------------------------------------------------------------------------
| 4      | SQ            | 0.4000   |      | 0  | 1       |
| 5      | OB            | 0.5598   | 0.4161     | 0  | 2       |
| 9      | RE            | 0.3150   | 2.3618     | 0  | 1       |
|                                                          |TOTAL: 4 |
```

Z:\FOXFAB_DATA\ENGINEERING\2 JOBS\J15302 Garner Road -PO#23

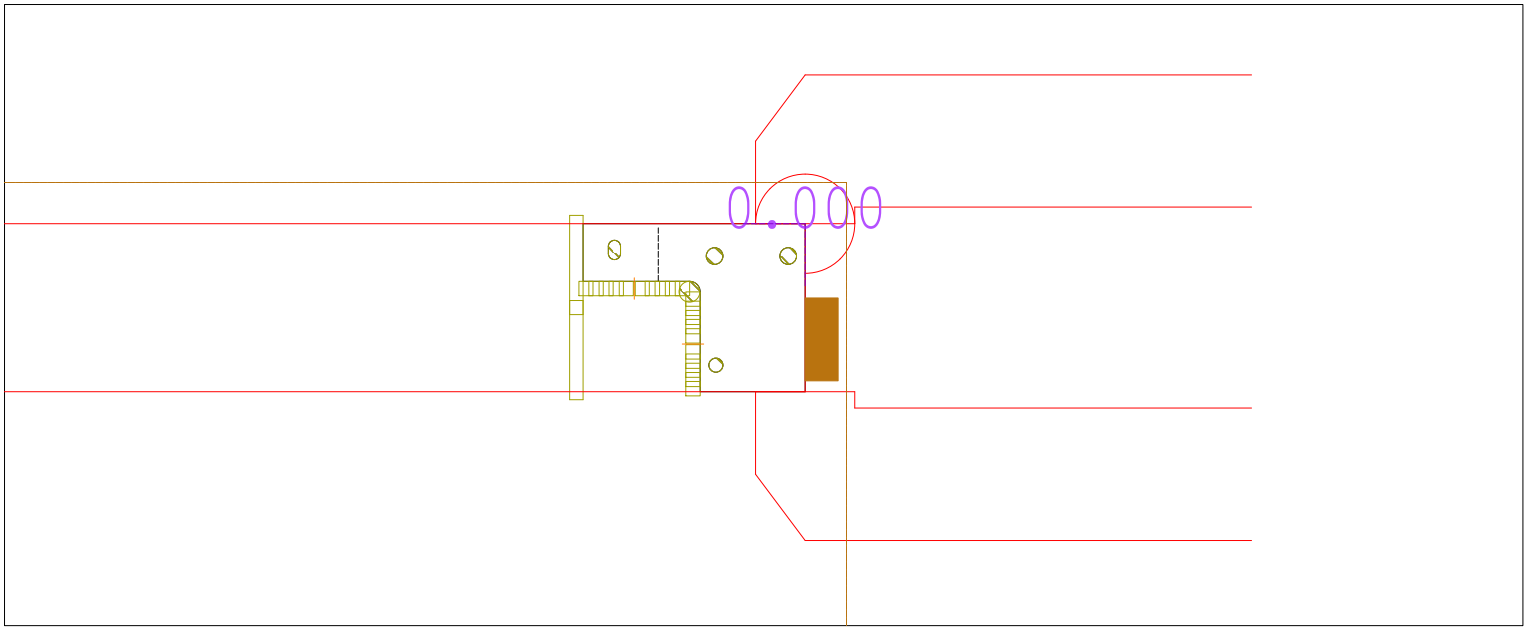


```
 === PART ==================================================================
|NC File Name: Z:\FOXFAB_DATA\ENGINEERING\2 JOBS\J15302 GARNER ROAD  -PO#2365-895801\200 MECH\
|Draft Num: 90007         |Date: JUL 28 2025       |Version:             |
|Order Num:        |Description:                                  |
 === SHEET ==============Number of Sheets: 1 ==================
|Material: Copper                   |Sheet Size: 144 X 4       |T= 0.250   |
|Num of Parts: 1               |Part Size: 5.290 X 4.000                 |
|Part Weight: 0.148 kg                |Sheet Weight: 6.37 kg              |
 === MACHINE ===============================================================
|Model: BO_COPPERBAR BO_CU-10STATIONS                          |Clearance: 0.0362  0.0425  0.048
|Rotate/Turn Sheet: No             |Clamps: 0                        |
|Num of Repositions: 0        |                                    |
 === PROGRAM ===============================================================
|Number: 90007    |Length: 865      |Programmer:              |
|Notes: VERTICAL OBLONG                                                                    |
 === JOB TIME ==============================================================
|Travel: 00:01  |Tool Change: 02:40    |Punch: 00:28 |Tot: 03:09     |
 === USED TOOLS LIST (A total of      6 tools) ==========================
| ST No.   | Type       | Length    | Width      | Angle   | Hits           |
 ---------------------------------------------------------------------------
| 3 AI     | OB            | 0.4598   | 0.2902     | 0  | 1       |
| 2      | RO            | 0.4059   |      |   | 2       |
| 5      | RO            | 0.3441   |      |   | 1       |
| 6      | RO            | 0.5000   |      |   | 1       |
| 4      | SQ            | 0.3402   |      | 0  | 20       |
| 9      | RE            | 0.3150   | 2.3618     | 0  | 2       |
|                                                          |TOTAL: 27 |
```